Tiandy

TC-H353N Spec:I5W/C/WIFI/Eu/4mm/V4.2

PT Camera

Wi-Fi Series

KEY FEATURES

- Plastic housing
- Up to 5MP,2880×1620@20fps
- S+265/H.265/H.264B/H.264M/H.264H
- Color:0.02Lux@(F1.6,AGC ON),B/W:0Lux with IR
- IR range up to 50m
- 1×Built-in Mic, 1×Built-in Loudspeaker
- Support microSD/microSDHC/microSDXC card,up to 512GB
- Operating conditions -30°C~60°C(-22°F~140°F), ≤95%RH
- DC12V±25%,Max. 12W
- IP66

Tiandy Technologies Co.,Ltd Tiandy Overseas Tiandy @tiandyofficial

Tiandy Technologies Co.,Ltd.
Email: sales@tiandy.com Tel: +86-22-58596065
Website: en.tiandy.com Fax: +86-22-58596048

2025.12.02

Tiandy

SPECIFICATIONS

Camera	
Image Sensor	1/2.7"CMOS
Min. Illumination	Color:0.02Lux@(F1.6,AGC ON),B/W:0Lux with IR
Shutter Time	1s~1/100000s
Day&Night	IR-cut filter with auto switch (ICR)
Smart IR	Yes
WDR	DWDR
S/N	>38dB
Angle Adjustment	0~294°(P); 0~90°(T)
Lens	
Lens Type	Fixed focal lens
Focal Length	4mm
Lens Mount	M12
Aperture Range	F1.6
Aperture Type	Fixed
Field of View	90°(H); 45.1°(V); 105°(D)
DORI Distance	Detect:80m Observe:31.75m Recognize:16m Identify:8m
Pan&Tilt	
Pan Speed	30°/s
Tilt Speed	25°/s
Preset	255
Illuminator	
IR LEDs	6
IR Distance	Up to 50m
Wavelength	850nm
White LEDs	6
Whitelight Distance	15m
Compression Standard	
Video Compression	S+265/H.265/H.264B/H.264M/H.264H
Video Bit Rate	32k~4Mbps
Audio Compression	G.711A/G.711U
Audio Sampling Rate	8kHz
Image	
Max. Resolution	5MP,2880×1620@20fps

Tiandy

Main Stream	PAL:20fps(2880×1620, 2560×1440, 2304×1296, 1920×1080, 1280×720) NTSC:20fps(2880×1620, 2560×1440, 2304×1296, 1920×1080, 1280×720)
Sub Stream	PAL:20fps(704×576, 704×288, 640×360, 352×288) NTSC:20fps(704×480, 704×240, 640×360, 352×240)
BLC	Yes
HLC	Yes
AGC	Yes
3D DNR	Yes
White Balance	Auto/Semi-Auto/Manual/Sunshine/Nature Light/Warmlight Lamp/Daylight Lamp/Filament Lamp/Lock White Balance
OSD	Overlay of additional characters in 1 regions, 1 line, with a maximum of 48 characters or 16 Chinese characters per region; 16*16/32*32/48*48; Lattice
Privacy Mask	4 black static areas
Defog	Yes
Feature	
Exceptions Alarm	Disk Full; Disk R/W Error; IP Address Conflict; MAC Address Conflict; Network Disconnection
Linkage Method	Trigger Sound; Trigger Warmlight; Trigger Recording; Trigger Capture; Notify Surveillance Center
Video Analytics	Smart Alarm
Auto-Tracking	Auto-Tracking
Network	
ANR	Yes
Protocols	RTSP; HTTP; TCP; UDP; ICMP; DHCP; DNS; NTP; TLS v1.2; IPv4; SSH; Unicast; ARP; RTP; FTP
System Compatibility	ONVIF(Profile S/T) ; SDK; CGI; Milestone
Remote Connection	≤2
Client	Easy7 VMS
Mobile Client	EasyLive Plus
Web	IE10+; Firefox52+; Edge89+; Safari11+; Chrome57+
Wi-Fi	
Transmission Distance	Up tp 30m(based on actual environment)
Wireless Standard	IEEE802.11b/ 802.11g/802.11n
Frequency Range	2.4 GHz ~ 2.4835 GHz
Channel Bandwidth	20/40MHz
Wi-Fi Security	WPA-PSK/WPA2-PSK
Interface	
Communication Interface	1×RJ-45 (10/100 Base-T)
Built-in Mic	1×Built-in Mic
Built-in Speaker	1×Built-in Loudspeaker
Reset Button	Yes
On-board Storage	Support microSD/microSDHC/microSDXC card,up to 512GB

Tiandy

General	
Web Client Language	3 languages Simple Chinese/English/Vietnamese
Operating Temperature	-30°C~60°C(-22°F~140°F)
Operating Humidity	≤95%RH
Storage Temperature	-30°C~60°C(-22°F~140°F)
Storage Humidity	10%~95%RH(non-condensing)
Power Supply	DC12V±25%,Max. 12W
Protection	Surge4000V; ESD6000V; IP66
Boundary Dimensions	138(L)112(W)173(H)mm
Package Dimensions	160(L)160(W)205(H)mm
GrossWeight	0.67kg
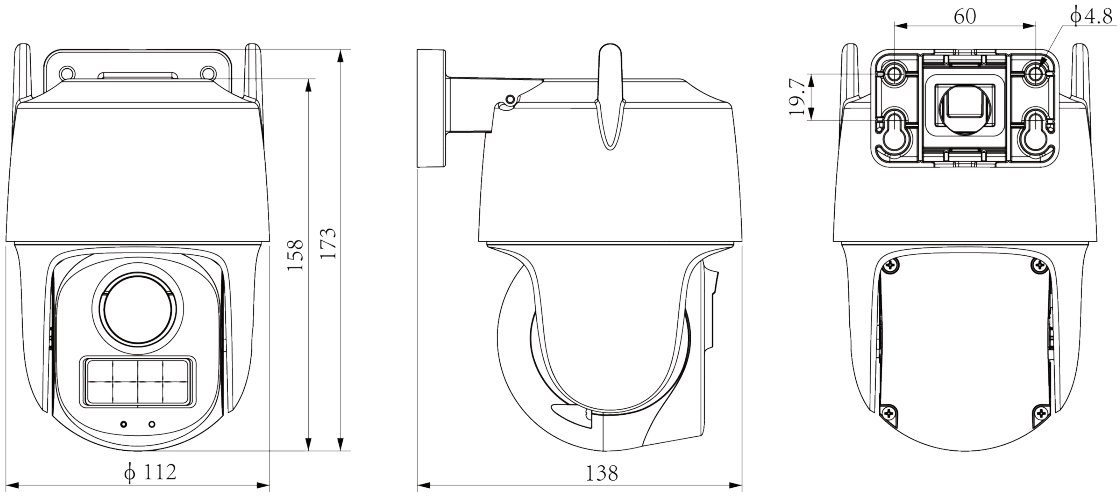
DIMENSIONS (Unit: mm)