Tiandy

TC-H333K 9DA-4

PT Camera

4G Series

KEY FEATURES

- Plastic housing
- Up to 3MP,2304×1296@20fps
- S+265/H.265
- Color:0.02Lux@(F1.6,AGC ON),B/W:0Lux with IR
- IR range up to 30m
- 1×Built-in Mic, 1×Built-in Loudspeaker
- Support microSD/microSDHC/microSDXC card,up to 256GB
- Operating conditions -10°C~50°C(14°F~122°F) (Charge:-5°C~50°C), ≤95%RH
- DC5V±25%,Max. 10W
- IP65

Tiandy Technologies Co.,Ltd Tiandy Overseas Tiandy @tiandyofficial

Tiandy Technologies Co.,Ltd.
Email: sales@tiandy.com Tel: +86-22-58596065
Website: en.tiandy.com Fax: +86-22-58596048

2025.12.02

Tiandy

SPECIFICATIONS

Camera	
Image Sensor	1/3"CMOS
Min. Illumination	Color:0.02Lux@(F1.6,AGC ON),B/W:0Lux with IR
Shutter Time	1s-1/100000s
Day&Night	Fixed IR-cut
WDR	DWDR
S/N	≥52dB
Angle Adjustment	0~345°; 0~90°
Lens	
Lens Type	Fixed focal lens
Focal Length	4mm
Lens Mount	M12
Aperture Range	F1.6
Aperture Type	Fixed
Field of View	79.6°(H); 42.5°(V); 91.7°(D)
DORI Distance	Detect: 59.26 m Observe: 23.52 m Recognize: 11.85 m Identify: 5.93 m
Pan&Tilt	
Pan Speed	30°/s
Tilt Speed	25°/s
Preset	64
Illuminator	
IR LEDs	2
IR Distance	Up to 30m
Wavelength	850nm
White LEDs	2
Whitelight Distance	15m
Red and Blue Alarm Flash	Yes
Compression Standard	
Video Compression	S+265/H.265
Video Bit Rate	1.2Mbps
Audio Compression	G.711A
Audio Sampling Rate	16kHz
Image	
Max. Resolution	3MP,2304×1296@20fps
Main Stream	PAL:20fps(2304×1296)

Tiandy

Sub Stream	PAL:20fps(704x576)
AGC	Yes
3D DNR	Yes
White Balance	Auto
OSD	48*48; Lattice
Feature	
General Alarm	Smart Alarm(human and vehicle detection)
Exceptions Alarm	Disk Full; Disk R/W Error
Linkage Method	Trigger Sound; Trigger Warmlight; Trigger Recording; Trigger Capture
Auto-Tracking	Auto-Tracking
Network	
Protocols	TCP/IP; UDP; ICMP; DNS; NTP; IPv4; SSH; Unicast
Remote Connection	≤2
Client	Easy7 VMS
Mobile Client	EasyLive Plus
Interface	
Built-in Mic	1×Built-in Mic
Built-in Speaker	1×Built-in Loudspeaker
Reset Button	Yes
On-board Storage	Support microSD/microSDHC/microSDXC card,up to 256GB
General	
Operating Temperature	-10°C~50°C(14°F~122°F) (Charge:-5°C~50°C)
Operating Humidity	≤95%RH
Storage Temperature	-10°C~50°C(14°F~122°F),
Storage Humidity	10%~95%RH(non-condensing)
Power Supply	DC5V±25%,Max. 10W
Protection	Surge500V; ESD6000V; IP65
Boundary Dimensions	158(L)105W)144(H)mm
Package Dimensions	255(L)200(W)180(H)mm
GrossWeight	1.27kg

Tiandy
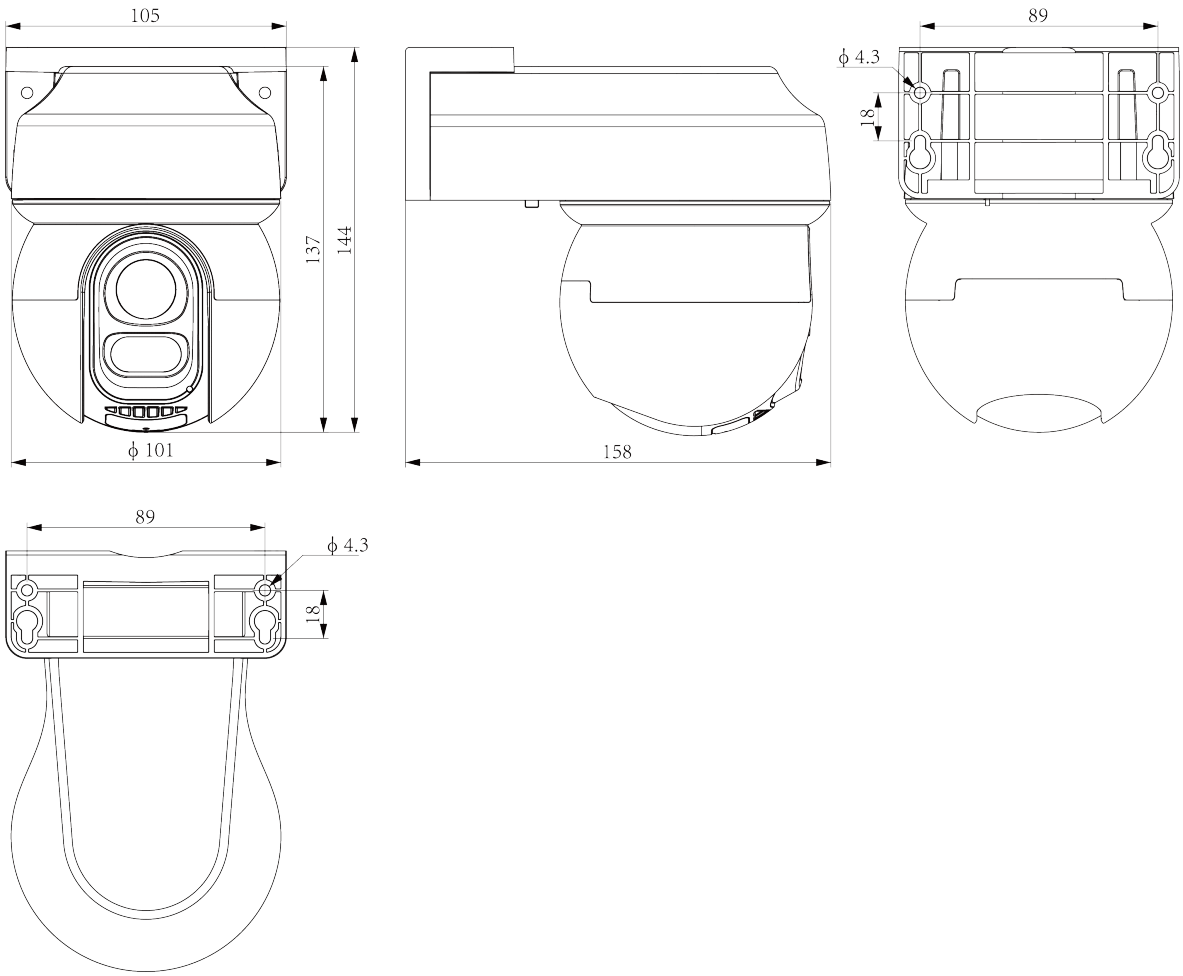
DIMENSIONS (Unit: mm)